No.	SIZE	L(mm)	MINIMUM BEND RADIUS (mm)	PIPING CLASS	FLUID	DESIGN / OPERATING		HYDRO TEST	Q'ty	HOSE NUMBER
						TEMP.(°C)	PRESS.(barg)	PRESS.(barg)		
1	DN50(2")	800	225	AC2	WASTE WATER	80 / 70	10 / 5.5	15	24	SEE NOTE 5.

NOTE

1. ALL DIMENSIONS IN MILLIMETERS
2. INSPECTION & TEST
   - VISUAL & DIMENSION INSPCETION
   - HYDRO TEST
3. PACKING : PREVENTIVE WOODEN BOX
4. PAINTING CODE : PS-10(STAINLESS STEEL)
5. HOSE NUMBER
   - 04GMT03 AR001, 04GMT03 AR002, 04GMT03 AR003,
   - 04GMT04 AR001, 04GMT04 AR002, 04GMT04 AR003
6. THIS IS TYPICAL FOR UNIT 01, 02, 03 & 04

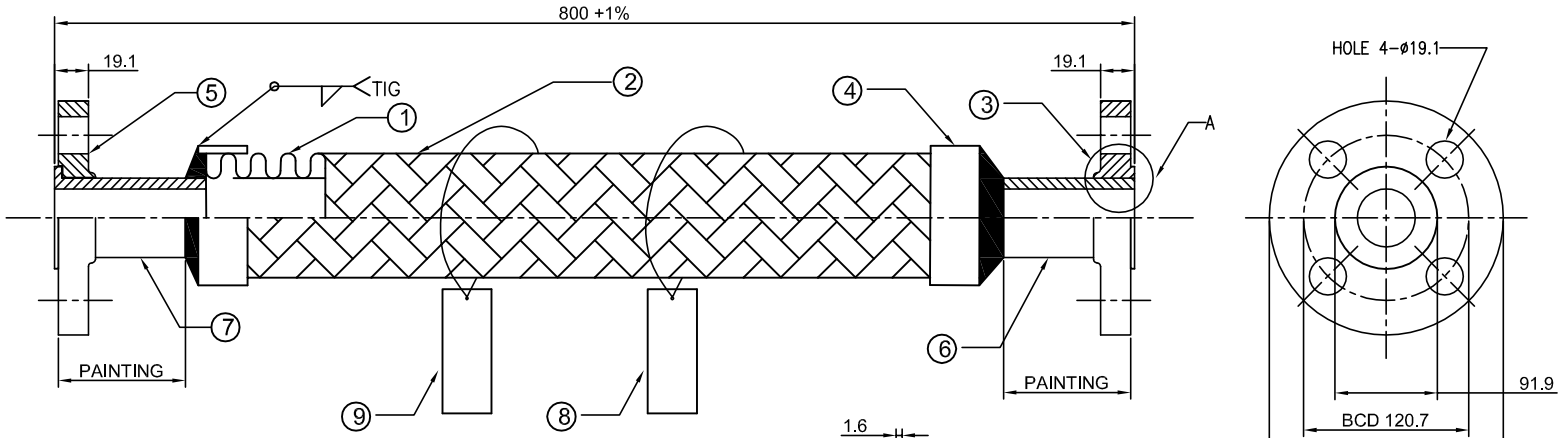

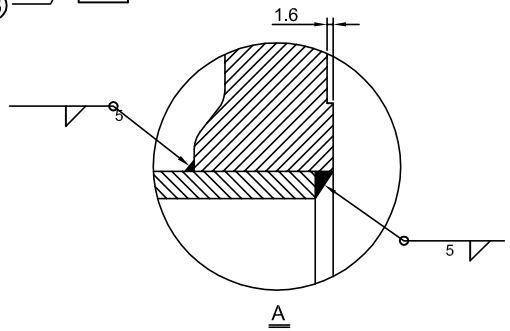

No.	Description	Q'ty	Material	Specification	WEIGHT(kg)
1	BELLOWS	1EA	ASTM A240 TYPE316L	0.3t	-
2	BRAID	1EA	ASTM A478-304	0.35t	-
3	FLANGE	1EA	ASTM A182 F316L	ANSI 150# 2" SO. RF	-
4	BEND	2EA	ASTM A312 TP316L	-	-
5	FLANGE	1EA	ASTM A182 F316L	ANSI 150# 2" SWIVEL	-
6	PIPE	1EA	ASTM A312 TP316L	SCH.40S	-
7	STUB END	1EA	ASTM A312 TP316L	SCH.40S	-
8	NAME PLATE	1EA	ASTM A240 TYPE316	100 X 35 X 1.0t	-
9	TAG PLATE	1EA	ASTM A240 TYPE316	50 X 15 X 0.8t	-
				TOTAL	6kg / 1SET

1. Manufacture : Han Wool H&P
2. Tag No. : 04GMT03 AR001
3. Size / Fluid : DN50(2") / Waste Waterr
4. Material : ASTM A182-F316L
5. Design Pressure / Temperature : 10barg / 80℃
6. Type : ANSI 150# RF 2"
7. Manufacture Serial No. : FH-06
8. Rating : 150#
9. Year of Manufacturing : 2015. 2.

NAME PLATE

REFERENCE DRAWINGS

	DRAWING TITLE	DRAWING NO.
-	GENERAL ASSEMBLY DRAWING	- 00-TAA-P-08-V460-001
-		-
-		-
-		-
-		-
-		-
-		-
-		-

REV.	DATE	DESCRIPTION	DESIGNED	CHECKED	APPROVED
0	30.MAY.2015	ISSUED FOR CONSTRUCTION	J.H HWANG	Y.H AN	S.S LEE
B	03.APR.2015	ISSUED FOR APPROVAL	J.H HWANG	Y.H AN	S.S LEE
C	10.NOV.2014	ISSUED FOR APPROVAL	J.H HWANG	Y.H AN	S.S LEE
B	15.OCT.2014	ISSUED FOR APPROVAL	J.H HWANG	Y.H AN	S.S LEE
A	07.APR.2014	ISSUED FOR APPROVAL	J.H HWANG	Y.H AN	S.S LEE

PROJECT
JEDDAH SOUTH THERMAL POWER PLANT STAGE-I

OWNER
الشركة السعودية للكهرباء
Saudi Electricity Company

ENGINEER
FICHTNER

CONTRACTOR
HYUNDAI HEAVY INDUSTRIES CO., LTD.

SUBCONTRACTOR
HanWool

VENDOR INTERNAL DWG NO.
JD-HW-FH-001

THIS DRAWING IS NOT TO BE USED FOR CONSTRUCTION OR FOR ORDERING MATERIAL UNTIL CERTIFIED AND DATED. THE CONTRACTOR HAS CHECKED FULLY COMPLIANCE WITH THE OE'S COMMENTS. NO OTHER CHANGES HAS BEEN MADE ON THE DRAWING. THE CONTRACTOR MAY SUBMIT THE DRAWING AS "FOR CONSTRUCTION"

APPROVAL/CERTIFICATION INFORMATION
DOC. NO. TCE-MM-FH-RT-110083
REV. NO. B-CHECK STATUS 2

DRAWING TITLE
GENERAL ASSEMBLY DRAWING
(FLEXIBLE METAL HOSE)

CONTRACT NO.	SCALE	DRAWING NO.	SHEET NO.	REV.
31121106/00	N/A	00-TAA-P-08-V460-006	01 OF 01	0

THIS DRAWING AND THE INFORMATION CONTAINED HEREIN ARE THE SOLE PROPERTY OF SAUDI ELECTRICITY CO. NO REPRODUCTION IN FULL OR IN PART SHALL BE OBTAINED FROM THIS DOCUMENT WITHOUT THE WRITTEN CONSENT OF ITS OWNER.

A2(297×420)