| PO | | TN | |
|---|---|---|---|

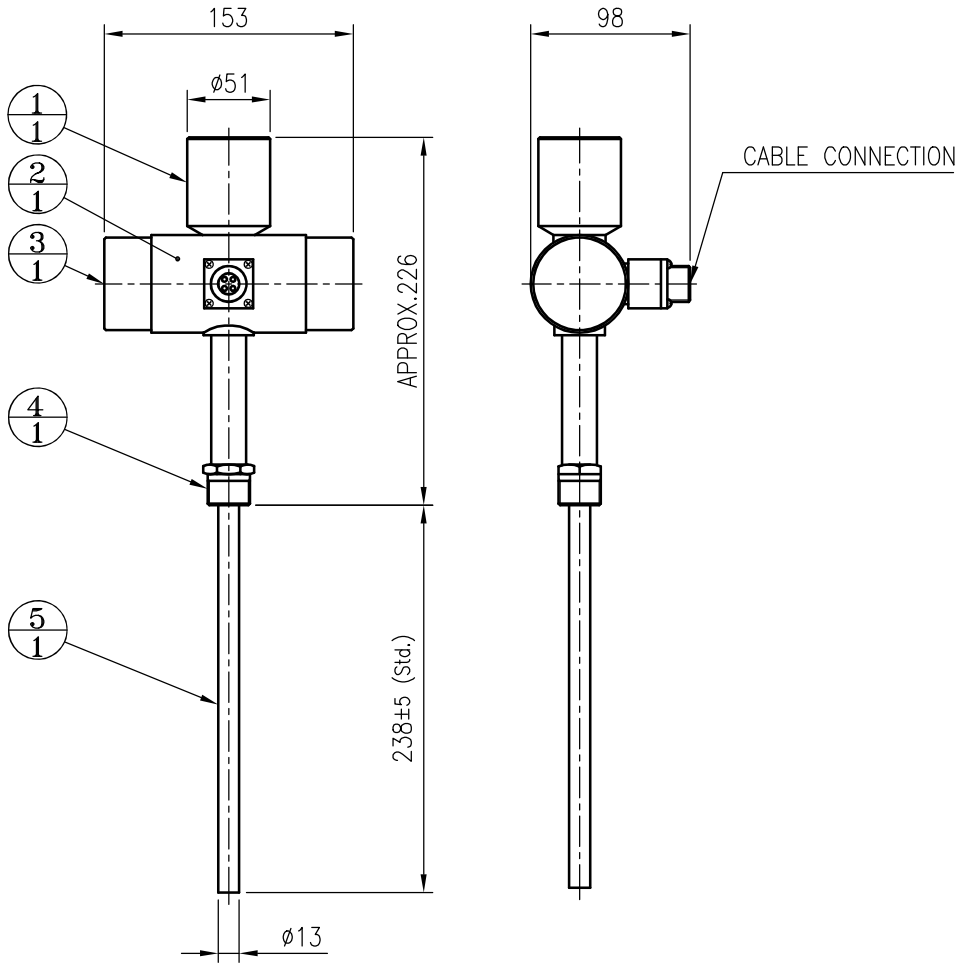


| FOR | SEPARATE TYPE LEVEL SWITCH |
|---|---|
| MOUNTING | TOP & SIDE, SCREW |
| ENCLOSURE | WEATHER PROOF (IP65) |
| AMBIENT TEMP. | −20 ~ +60 °C |
| MAX. PRESSURE | 10 kgf/cm² |
| MAX. TEMP. | 150 °C |

| CABLE CONNECTION SIZE | SHELL 14S |
|---|---|

| NO. | DESCRIPTION | MATERIAL | REMARK |
|---|---|---|---|
| 1 | WEIGHT | C.S | |
| 2 | BODY | C.S | |
| 3 | COVER | C.S | |
| 4 | PROCESS CONN. | 304 SS | |
| 5 | SENSING ROD | 316L SS | |

| PROCESS CONN. SIZE |
|---|
| PT 3/4"(M) |

| TAG. NO. | QT'Y | REMARK |
|---|---|---|
| | | |
| | | |
| | | |

NOTE
1. GENERAL TOLERANCE ±3mm EXCEPT AS NOTED.

| NO. | DATE | REVISION | REV'D BY | CHK'D BY | APP'D BY |
|---|---|---|---|---|---|
| 4 | . . | | | | |
| 3 | . . | | | | |
| 2 | . . | | | | |
| 1 | . . | | | | |
| 0 | JAN. 2018 | 1st ISSUE | D Y KIM | B S SUNG | Y H KIM |

HITROL CO., LTD.

TITLE
VIBRATION TYPE LEVEL SWITCH
HTM-930

| SCALE | UNIT | SHEET NO. |
|---|---|---|
| N.S | mm | / |

PROJECT

DRAWING NO.
HTM930-A-01

A4(210mm x 297mm)

This drawing is the property of HITROL and shall not be copied, communicated, or given for third-party except with our written permission.