<MAGNETIC RETIRING CAM>

NOTE.

1. Model : W-2-L.M.G

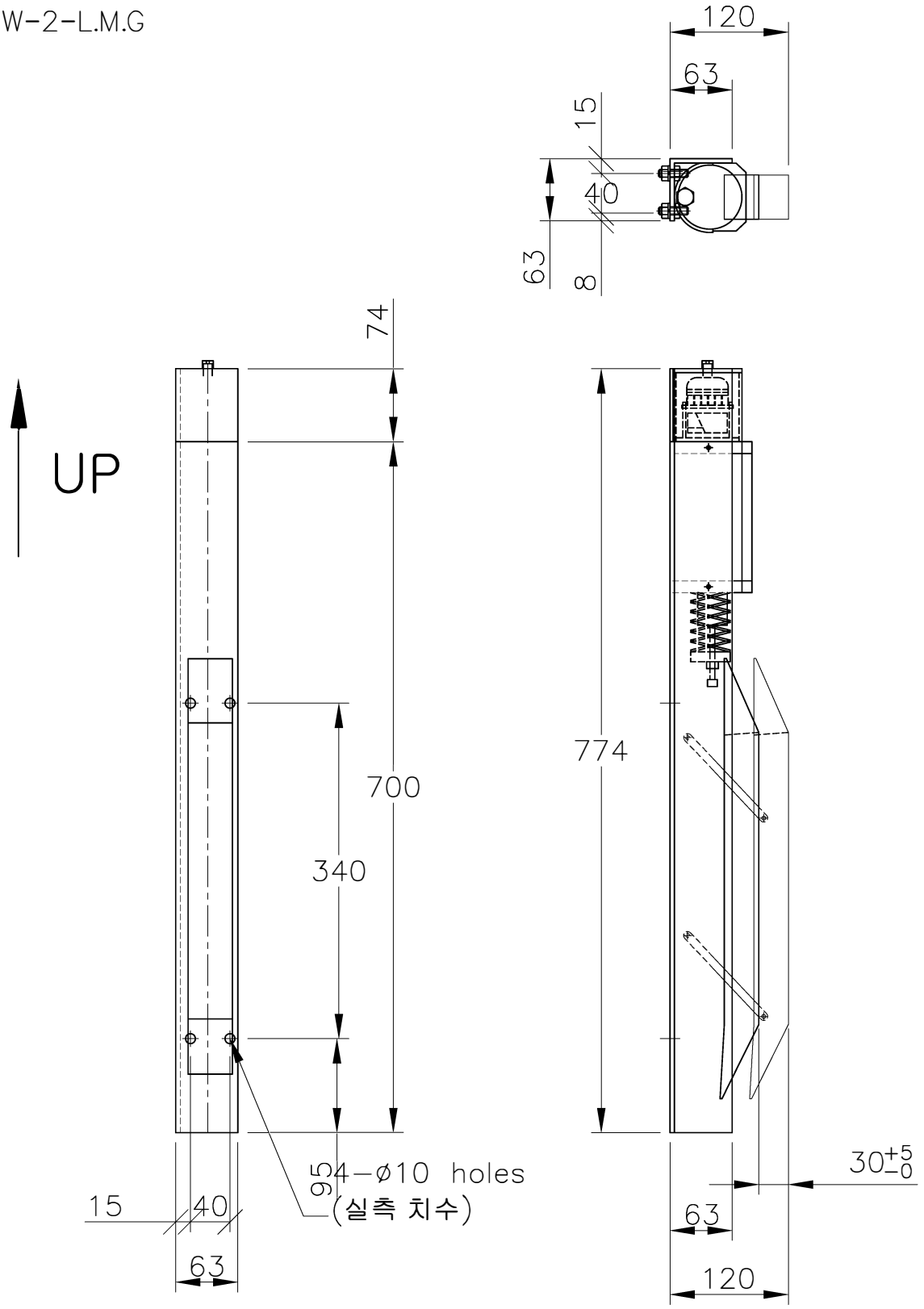

Project NO	Set	Customer	
Appd	Date		
Check	Date	Title MAGNETIC RETIRING CAM	Scale 1/6
Drawn M.S.KIM	Date 2012.10.30		Angle 3RD
DAEMYUNG ELEVATOR.,LTD.		Drawing no.	Rev B

THIS DRAWING MUST NOT BE COPIED WITHOUT OUR WRITTEN PERMISSION AND THE CONTENTS MUST NOT BE IMPARTED TO A THIRD PARTY, OR BE USED FOR ANY UNAUTHORIZED PURPOSE. CONTRAVENTION WILL BE PROSECUTED.

A4(210x297mm)