Design features

- **Simple zero and span adjustment.** Internal hand dials and locking screws for 4-20 mA range adjustments.
- **Reverse and direct-acting settings.** Full and ½ split range setting by simple adjustment.
- **High vibration resistant.** No resonance between 5 to 200 Hz.
- **Internal Analogue Output.** Available on weatherproof model only.
- **Auto / manual switch.** Internal adjustment with lock screw safety.

YT-1000 aluminium enclosure



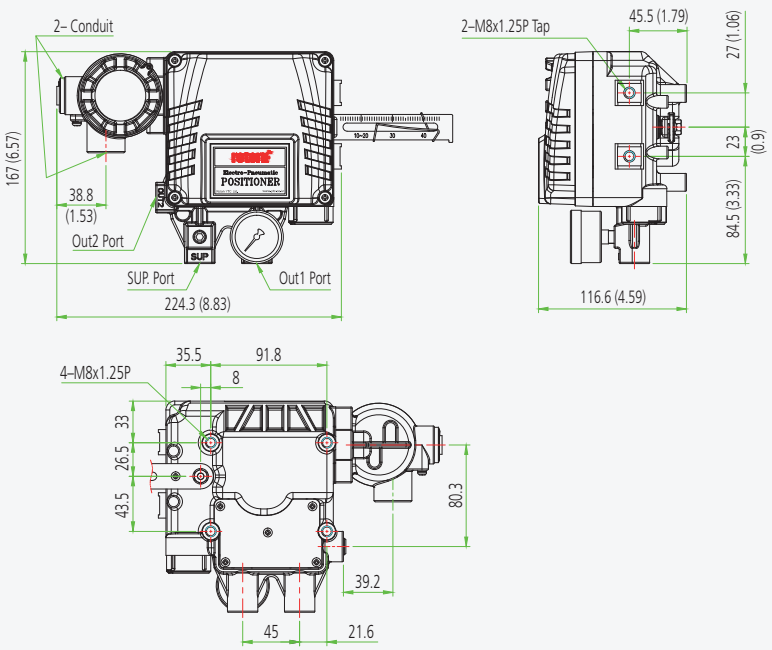

YT-1050 STS316 enclosure



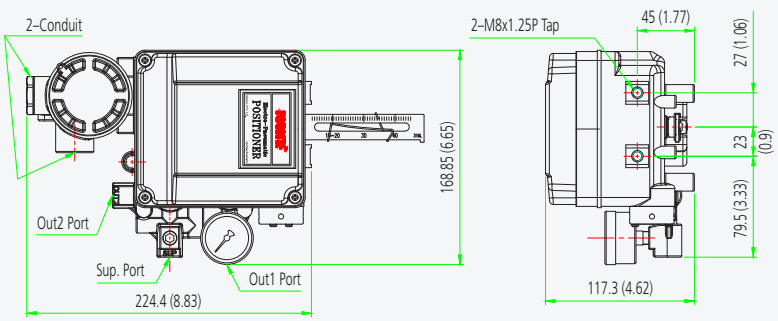

Dimensions: mm (Inches ")

Item type		YT-1000	YT-1050
Input signal		4-20 mA DC	
Impedance		250 ± 15 Ω	
Supply pressure		0.14 to 0.7 MPa = 1.4 to 7 bar = 20 to 102 psi	
Stroke	Linear type	10 to 150 mm (0.4 to 6")	
	Rotary type	55 to 100˚	
Air connection		Rc ¼, ¼ NPT, G ¼	¼ NPT
Gauge connection		⅛ NPT	
Conduit		G(NPT) ½, M20	G ½, ½ NPT
Explosion protection type		**ATEX / IECEx:** (II 2 G) Ex dmb IIB T5, Ex ia IIC T6 (YT-1000 only) **INMETRO:** (II 2 G) Ex dmb IIB T5 **UKEX**: II 2G Ex db mb IIB T5 Gb, NEMA 4X	
		KCs Ex dmb IIB T5/T4 / Ex dmb IIC T5 / Ex ia IIB T6 Gb **CSA** (Class I, Zone 1) Ex dm IIB T5 **FM** CL I, Div 1, Groups C, D T5; CL II, III, Div 1, Groups E, F, G T5; Type 4X **CCC, NEPSI** Ex db mb IIB T5 Gb, Ex db mb IIC T6 Gb, Ex ia IIC T6 Gb **TIIS** Ex dmb IIB T5 **NEPSI** Ex d mb IIB T5 Gb, Ex d mb IIC T6 Gb, Ex ia IIC T6 Ga **PESO** Ex db mb IIB T5 Gb, Ex ia IIC T6 Gb	**KCs** Ex dmb IIB T5 **CCC** Ex d mb IIB T5 Gb **NEPSI** Ex d mb IIB T5 Gb **PESO** Ex db mb IIB T5 Gb
Ingress protection		YT-1000: IP66, TYPE 4X (FM) YT-1050: IP66 (excluding the pressure gauges)	
Linearity	Single	± 1% F.S.	
	Double	± 2% F.S.	
Hysteresis		±1% F.S.	
Sensitivity	Single	± 0.2% F.S.	
	Double	± 0.5% F.S.	
Repeatability		± 0.5% F.S.	
Air consumption		2.5 LPM (sup = 0.14 MPa) 0.8 CFM (sup = 20 psi)	
Flow capacity		80 LPM (sup = 0.14 MPa) 2.83 CFM (sup = 20 psi)	
Material		Aluminium diecasting	Stainless steel 316
Weight		YT-1000L: 2.7 kg (6.1 lb) YT-1000R: 2.8 kg (6.2 lb) YT-1050: 5.71 kg (12.6 lb)	

YT-1000L Product code

YT-1000 - L - S - N - 1 - 1 - 4 - S - 0

Model
YT-1000 = Aluminium

Motion type
L = Linear

Acting type
S = Single D = Double

Explosion protection[1]
N = Non-explosion proof
M[2] = Ex db mb IIB T5 Gb: ATEX, IECEx, KCs, NEPSI, UKEX, PESO
T = Ex db mb IIB T5 Gb: INMETRO
A = Ex d m IIB T5: CSA
F = Flameproof enclosure & encapsulation: FM
C = Ex dmb IIC T5: KCs
X = Ex dmb IIB T5: TIIS
Z[3] = Ex db mb IIB T5 Gb: CCC, NEPSI
B[4] = Ex db mb IIC T6 Gb: CCC, NEPSI
G = Ex ia IIC T6 Gb: CCC, NEPSI
i = Ex ia IIC T6 Gb: ATEX, IECEx, KCs, UKEX, PESO

Lever type
Linear
1 = 10 to 40 mm
2 = 30 to 70 mm
3 = 60 to 100 mm
4 = 100 to 150 mm

Orifice type
1 = Φ1 2 = Φ2 3 = None

Conduit & air connection
1 = G ½ - Rc ¼ (N/A for FM, CSA)
2 = G ½ - ¼ NPT (N/A for FM, CSA)
3 = G ½ - G¼ (N/A for FM, CSA)
4 = M20 - ¼ NPT
5 = ½ NPT - ¼ NPT

Operating temp. (non-explosion proof)[5]
S = -20 to +70 °C (-4 to +158 °F)
H = -20 to +120 °C (-4 to +248 °F)
L = -40 to +70 °C (-40 to +158 °F)

Option
0 = None
2[6] = 4-20 mA Analogue Output (internal, without LCD, non-explosion proof)
3[7] = 4-20 mA Analogue Output with LCD (internal with LCD, non-explosion proof)

YT-1000L Notes:
1. M (except KCs), T, F, X, Z, B, G, i are only available for operating temperature S. M (only KCs) is only available for operating temperature S and H. A, C are only available operating temperature S and L.
2. Please put the name of the certificate in a purchase order.
3,4. Z and B are only available for conduit & air connection 4 and 5.
5. This option is just the normal operating temperature of the product and is not related to explosion protection temperature. See certificates for explosion protection temperature.
6,7. Only available for operating temperature S and L.

See page 28 for YT-1000R and YT-1050 product code charts.

YT-1000R Product code

YT-1000 - R - S - N - 1 - 1 - 4 - S - 0 - 0

Model
YT-1000 = Aluminium

Motion type
R = Rotary

Acting type
S = Single D = Double

Explosion protection[1]
N = Non-explosion proof
M[2] = Ex db mb IIB T5 Gb: ATEX, IECEx, KCs, NEPSI, UKEX, PESO
T = Ex db mb IIB T5 Gb: INMETRO
A = Ex d m IIB T5: CSA
F = Flameproof enclosure & encapsulation: FM
C = Ex dmb IIC T5: KCs
X = Ex dmb IIB T5: TIIS
Z[3] = Ex db mb IIB T5 Gb: CCC, NEPSI
B[4] = Ex db mb IIC T6 Gb: CCC, NEPSI
G = Ex ia IIC T6 Gb: CCC, NEPSI
i = Ex ia IIC T6 Gb: ATEX, IECEx, KCs, UKEX, PESO

Lever type
1 = M6 X 34L
2 = M6 X 63L
3 = M8 X 34L
4 = M8 X 63L
5 = NAMUR

Orifice type
1 = Φ1 2 = Φ2 3 = None

Conduit & air connection
1 = G ½ - Rc ¼ (N/A for FM, CSA)
2 = G ½ - ¼ NPT (N/A for FM, CSA)
3 = G ½ - G¼ (N/A for FM, CSA)
4 = M20 - ¼ NPT
5 = ½ NPT - ¼ NPT

Operating temp. (non-explosion proof)[5]
S = -20 to +70 °C (-4 to +158 °F)
H = -20 to +120 °C (-4 to +248 °F)
L = -40 to +70 °C (-40 to +158 °F)

Option 1
0 = None (std)
1[6] = Dome cover

Option 2
0 = None
1[7] = 4-20 mA Analogue Output (internal, without LCD, non-explosion proof)
2[8] = 4-20 mA Analogue Output (external, SPTM-6V, explosion proof)
3[9] = Limit switch (2ea, internal, non-explosion proof)
4[10] = Limit switch (2ea, external, YT-850 (non-explosion proof) or YT-870 (explosion proof))
5[11] = 4-20 mA Analogue Output + limit switch (2ea) (internal, non-explosion proof)
6[12] = SPTM + limit switch (2ea) (external, YT-870, explosion proof)

YT-1050 Product code

YT-1050 - L - S - N - 1 - 1 - 2 - S

Model
YT-1050 = STS316

Motion type
L = Linear R = Rotary

Acting type
S = Single D = Double

Explosion protection[13]
N = Non-explosion proof
M[14] = Ex db mb IIB T5 Gb: ATEX, IECEx, KCs, UKEX, PESO
T = Ex db mb IIB T5 Gb: INMETRO
Z = Ex db mb IIB T5 Gb: CCC, NEPSI

Lever type

Linear	Rotary
1 = 10 to 40 mm	1 = M6 X 34L
2 = 30 to 70 mm	2 = M6 X 63L
3 = 60 to 100 mm	3 = M8 X 34L
4 = 100 to 150 mm	4 = M8 X 63L
	5 = NAMUR

Orifice type
1 = Φ1 2 = Φ2 3 = None

Conduit & air connection
1 = G ½ - R ¼ (N/A for CCC)
5 = ½ NPT - ¼ NPT (CCC only)

Operating temp. (non-explosion proof)[15]
S = -20 to +70 °C (-4 to +158 °F)
H = -20 to +120 °C (-4 to +248 °F)
L = -40 to +70 °C (-40 to +158 °F)

YT-1000R Notes:
1. M (except KCs), T, F, X, Z, B, G, i are only available for operating temperature S. M (only KCs) is only available for operating temperature S and H. A, C are only available operating temperature S and L.
2. Please put the name of the certificate in a purchase order.
3,4. Z and B are only available for conduit & air connection 4 and 5.
5. This option is just the normal operating temperature of the product and is not related to explosion protection temperature. See certificates for explosion protection temperature.
6. 1 in **Option 1** + 0 in **Option 2** is available for Explosion protection M (ATEX, IECEx, KCs and NEPSI only), A, C, Z, B, G, i (ATEX, IECEx and KCs only) and N.
7. There is also with LCD type. So if you would like to order this, please fill in "4-20 mA Analog Output (Internal, With LCD)" on the order form.
7,8. Only available for operating temperature S and L.
8. The nameplate of the external product, SPTM-6V, is KCs+NEPSI. The conduit entries of SPTM-6V is G ½. For NEPSI it is ½ NPT. SPTM-6V (Explosion protection for Ex d IIC) is certified with KCs and NEPSI so this option is available for Explosion protection M (KCs and NEPSI only), C, i (KCs only) and N. This option is only available for 0 in **Option 1**.

9,10,11,12. Only available for operating temperature S, and 1 in **Option 1**.
10. Mechanical switch (SPDT) is only available for YT-850. The conduit entry of YT-850 is G ½.
10,12. Mechanical switch (SPDT) and Inductive proximity (Autonics) are available for YT-870.
YT-870 has two types of nameplates, KCs+ATEX+IECEx+CSA and CCC. The conduit entry of YT-870 is G ¾. For CSA and CCC it is ½ NPT.
YT-870 (Explosion protection for Ex d IIC) is certified with KCs, ATEX, IECEx, CSA and CCC so this option is available for Explosion protection M (ATEX, IECEx and KCs only), A, C, Z, B, G, i (ATEX, IECEx and KCs only) and N.

YT-1050 Notes:
13. M (except KCs), T and Z are only available for operating temperature S. M (only KCs) is only available for operating temperature S and H.
14. Please put the name of the certificate in a purchase order.
15. This option is just the normal operating temperature of the product and is not related to explosion protection temperature. See certificates for explosion protection temperature.