Digital Over Current Relay [DIPR-OC01]



Digital Intelligent Protective Relay
- Over Current & Ground Over Current

◆ This relay can be applied to the protection of the distribution line, which is a direct earthing or resistance earthing system, and the protection of the feeder of the power receiving substation of the customer.

◆ Logic can be configured with a simple PLC program for input/output contacts, so it can be applied to various sequences and easily configured for a user's specific purpose.

◆ Various monitoring and measurement functions are supported, and it is possible to store 16 Faults, 128 System Events, 16 Waves and maximum waveform data, making accident analysis easier. Also, the self-diagnosis function is performed during operation, and an alarm is output when an error occurs.

◆ Through the operating program for the PC interface, you can set and monitor all protection elements and various functions supported by the product.

Specification Overview

▶ 50/51×3, 50N/51N element composition
▶ Real-time storage of line failure information including accident time with 128 EVENT storage
▶ Built-in Fault Recording function to save accident waveforms (up to 16)
▶ Instantaneous and definite time IEC 60255 5 built-in time curves (definite time, inverse time, strong time limit, early limit time, long time limit)
▶Relay set values and LOGIC configuration are permanently saved regardless of the presence or absence of control power.

Use Envirnmant

Store Temp. Range	-10℃ ~ 55 ℃
Use Temp. Range	-25 ℃ ~ 70 ℃
Use Humidity Range	Daily 30 ~ 80%
Elevation	Low than 1,000m Sea level
etc	Place no vibration and shock
Applicable Standard	KEMC 1120, IEC60255

Case

Type	Rectangular Drawout Type
Color	Munsell No. N1.5 (Black)
Material	LUPOY

Ratings

Rated Input	Frequency	60Hz/50Hz
	Input Current	CT Rate : 5A
	Control Power	AC/DC 100V ~ 240V
	Power Consumption	Stand by : less than 10W, Run : less than 20
	Input Burden	CT : within 0.5VA/Phase
	Minimum sense current	0.1A and more
Contact Capacity	Digital Input (DI)	Digital Input : AC/DC 100V ~ 240V
	Output Contact (Relay 2Ports for DO Trip)	AC 240V 30A, DC 28V 30A: Resistive Load
	Output Contact (Relay 2Ports for DO ALARM)	AC 240V 10A, DC 30V 10A: Max. switching voltage/ current

Over Current Element [50]

RUN	Rated Current	5A
	Operating current correction	5 ~ 100A (1.0A STEP)
	Operating Current Accuracy	within ±5% of correction value
	Operation time correction	Limited time (40~50ms), Definite time (0.04~60s/0.01s STEP)
	Operation time precision	within of correntionvalue, or ±35ms
RETURN	Return value	95% or more of correction value
	Return time	Less than 100ms
	Output holding time	0.00 ~ 30.00S (0.01 STEP) or continuity

Inverse Over Current Element [51]

RUN	Rated Current	5A
	Operating current correction	1.0 ~ 12.0A (0.1A STEP)
	Operating Current Accuracy	±5% of correction value
	Time Characteristic	DT, NI, VI, EI, LI (IEC)
	Operation time correction	0.10~10.0s (0.1s STEP), Definite time (0.04~60s / 0.01s STEP)
	Operation time precision	within 5% of correction value, or ±35ms
RETURN	Return value	95% and more of correction value
	Return time	Less than 100ms
	Output holding time	0.00 ~ 30.00S (0.01 STEP) or continuity

Instantaneous Ground Fault Over Current Element [50N]

RUN	Rated Current	5A
	Operating current correction	2.5 ~ 40.0A (0.1A STEP)
	Operating Current Accuracy	within ±5% of correction value
	Operation time correction	Instantaneous time (40~50ms), Definite time (0.04~60s/0.01s STEP)
	Operation time precision	within ±35ms of corrention value
RETURN	Return value	95% or more of correction value
	Return time	Less than 100ms
	Output holding time	0.00 ~ 30.00S (0.01 STEP) or continuity

Inverse Ground Fault Over Current Element [51N]

RUN	Rated Current	5A
	Operating current correction	0.5 ~ 5.0A (0.1A STEP)
	Operating Current Accuracy	within ±5% of correction value
	Time Characteristic	DT, NI, VI, EI, LI (IEC)
	Operation time correction	0.10~10.0s (0.1s STEP), Definite time (0.04~60s / 0.01s STEP)
	Operation time precision	within 5% of correction value, or ±35ms
RETURN	Return value	95% or more of correction value
	Return time	Less than 100ms
	Output holding time	0.00 ~ 30.00S (0.01 STEP) or continuity

Protection Relay Characteristic Curve

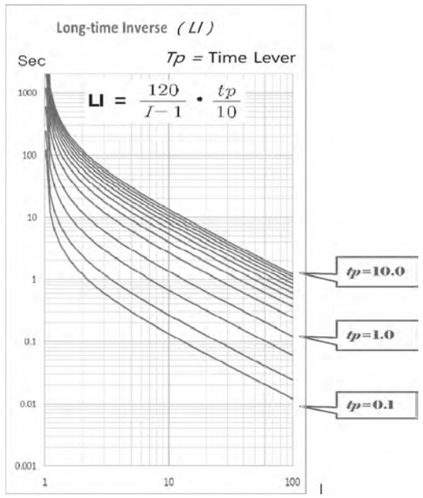

LI Curve (Long-time Inverse)

Protection Relay Characteristic Curve

DT Curve (Definite time)

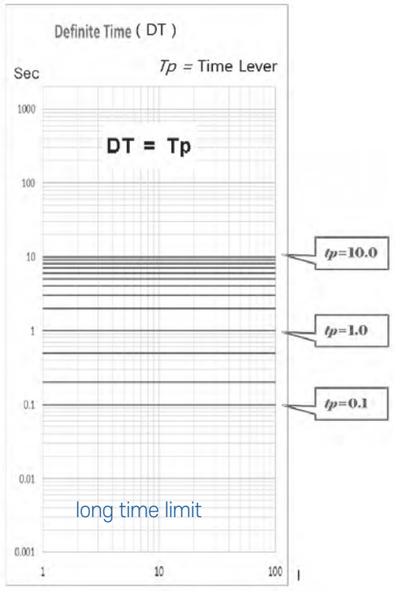

NI Curve (Normal Inverse)

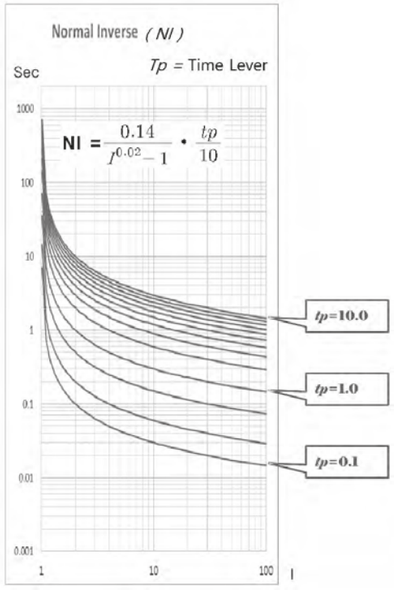

VI Curve (Very Inverse)

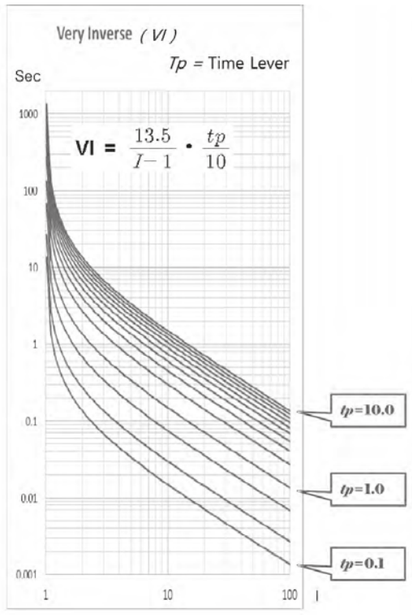

EI Curve (Extremely Inverse)

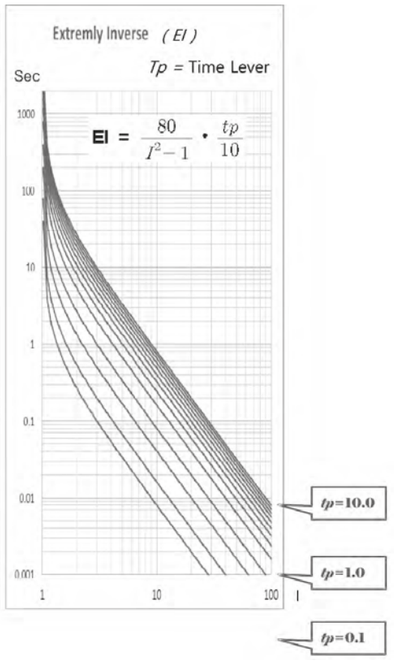

Continuous monitoring function [Self-diagnosis]

Add-on Function

CT/PT Calibration	It monitors whether CT/PT Calibration is performed, and if it is not valid data or calibration is not performed, it is recorded in the SYSTEM event.
Watch Dog	It judges whether DSP operates normally, and if the DSP does not operate normally, the external monitoring IC forcibly resets the DSP and peripheral devices and boots in the same order as when the first power is booted. In this case, there is no separate indication. Determining whether the DSP operates normally,
Memory and correction value abnormal monitoring	Monitors external memory errors. If the external memory does not operate normally, “FRAM ERROR” is displayed on the LCD, and if the correction value is abnormal, “MEMORY ERROR” is displayed and recorded in the SYSTEM event.

EVENT Function [EVENT RECORDING]

Add-on Function

Fault Event : 16 count	
Trigger	Pickup, Operation
Time Tag	Time of occur event
Main Information	Fault voltage or current
Sub Information	DI/DO Status
System Event : 128 count	
Trigger	Power ON, Setting changed, DI/DO Status change
Time Tag	Time of occur event
Wave : 16 count	
Trigger	Operation
Sample/Cycle	32
Saving Cycle	30 Cycle(50/60Hz common)
Time Tag	Time of occur operation

Measurement display function [METERING]

Add-on Function

Metering Items	Display range(Based on device display value)	Error (Device input rating standard)
Phase Current(A)	0.000A ~ 999.999kA (Cut-off less than 2% of rated value)	±0.5[%] at In, ±0.5[%] or ±0.05[A] (Rated 5A)
Zero Phase Current(N)	0.000A ~ 999.999kA (Cut-off less than 2% of rated value)	±0.05 or ±0.05 (Rated 5A)

Output contact setting [DO Default Setting]

Device	ITEMS	SETTING
DIPR-OC01	DO 01	OCR Time Limit , Instantaneous TRIP
	DO 02	OCGR Time Limit, Instantaneous TRIP
	DO 03	OCR Time Limit, Instantaneous ALRAM
	DO 04	OCGR Time Limit, Instantaneous ALRAM

Wiring Diagram (3P 3W)

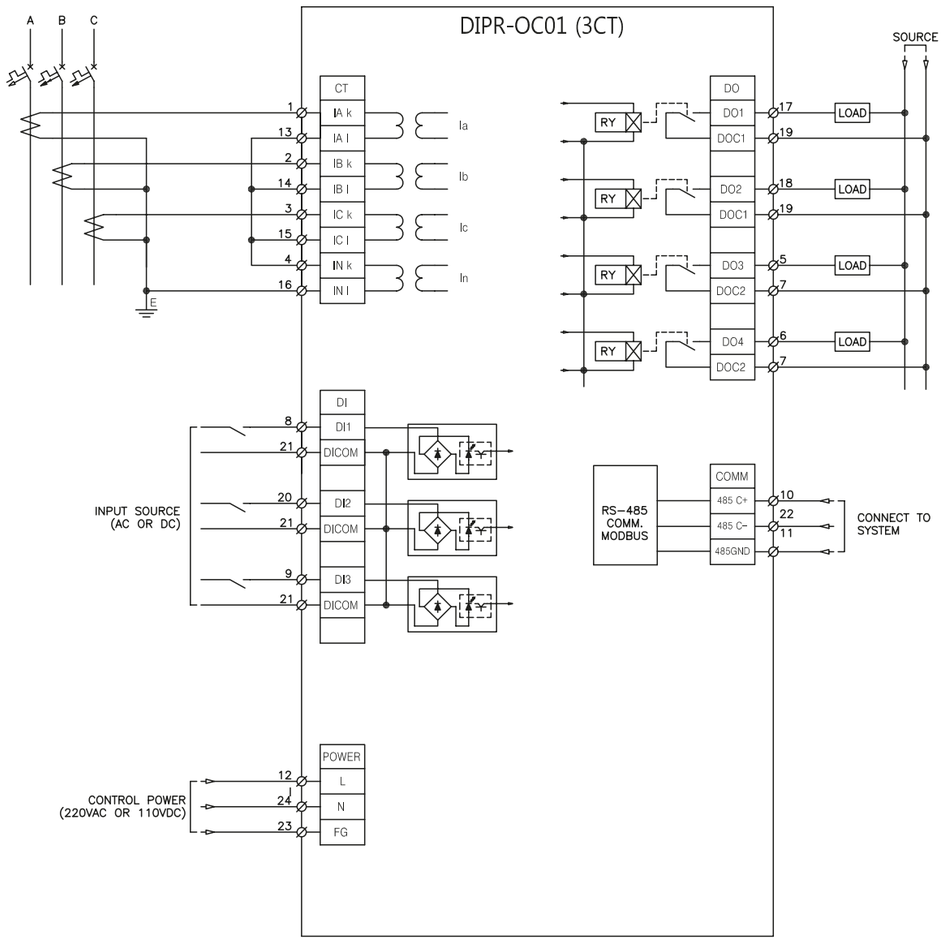

Wiring Diagram (3P 4W)

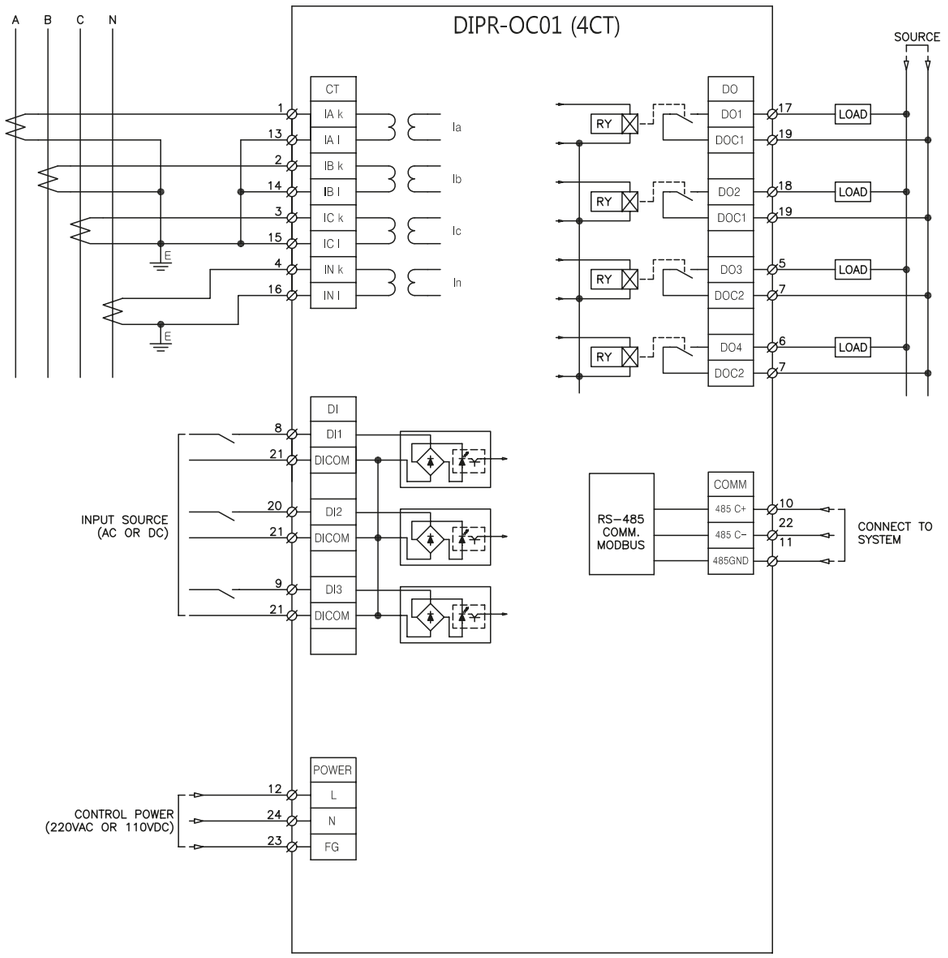

Terminal Configuration

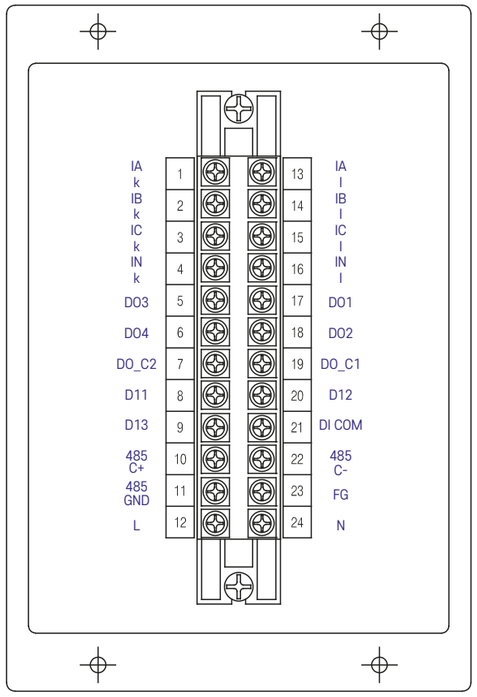

Items	Description
IA, IB, IC, IN	Connect the current input terminal and CT.
DO1 ~ DO4 DO_COM1 ~ _2	Digital Output terminal. Output Trip/Alarm signal in case of accident DO_COM1(COM)-DO1(NO),DO2(NO) : Contact for TRIP(40A) DO_COM2(COM)-DO3(NO),DO4(NO) : Contact for Alarm(16A) DO1 ~ 4 : Custom Setting
DI1 ~ 3/DI_COM	Digital Input Terminal. In the case of DI_1 and DI_2, the ON/OFF signal of the circuit breaker can be input and all DI terminals can be set arbitrarily by the user.
485C+/C-/GND	CommunicationTeminal. Comm. is RS-485/MODBUS method.
FG	FGound Terminal
L/N	Power Input Terminal. Rating : AC 85 ~ 240V

Dimensions

